REV. 5-25-16: CORRECTED WELD DETAIL.

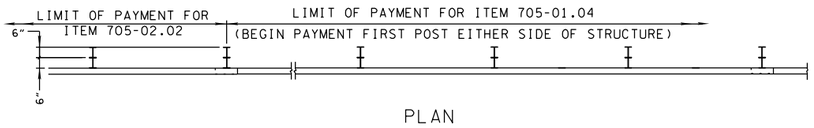

PLAN

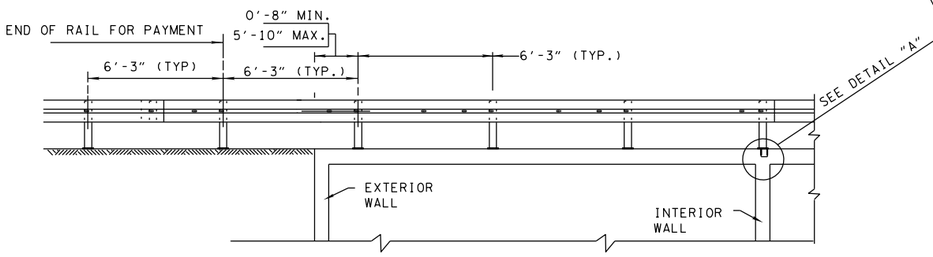

ELEVATION VIEW

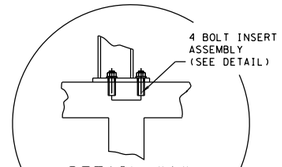

DETAIL "A"

INTERIOR WALL SHOWN, EXTERIOR WALL SIMILAR.

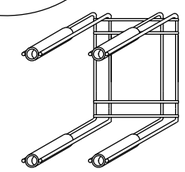

INSERT ASSEMBLY

FOR ¾" DIAMETER X 4" HEX HEAD BOLTS (ASTM A-307 SPECIFICATION)

INSERT ASSEMBLY IS FOR CONNECTION OF POSTS OVER WALLS ONLY AND NOT A SUBSTITUTE FOR PLATE ASSEMBLY ELSEWHERE.

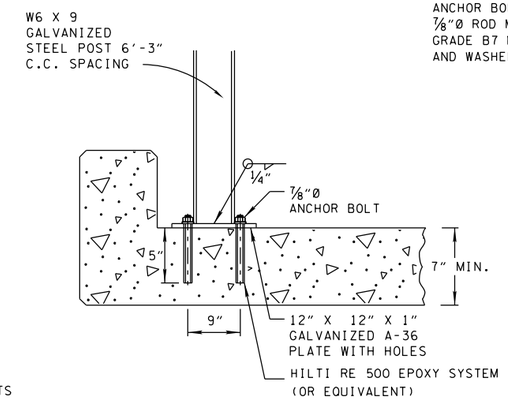

ANCHOR BOLT:
⅞"Ø ROD MATERIAL ASTM A193, GRADE B7 MATERIAL WITH NUTS AND WASHERS GALVANIZED

"DETAIL A"
ALTERNATE POST ATTACHMENT USING ANCHOR BOLTS

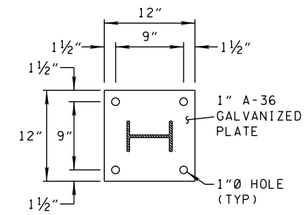

BASEPLATE DETAILS

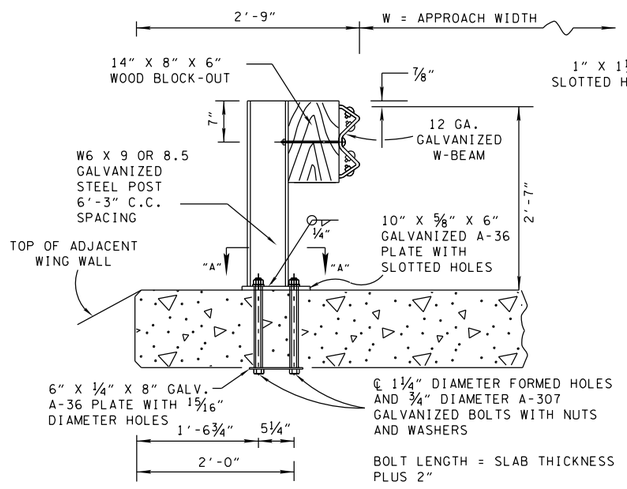

DETAIL FOR CONCRETE DECK USED AS A RIDING SURFACE

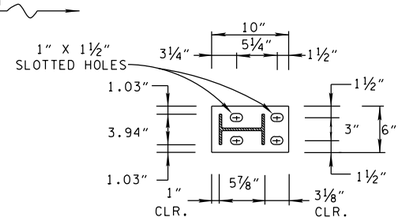

SECTION "A-A"

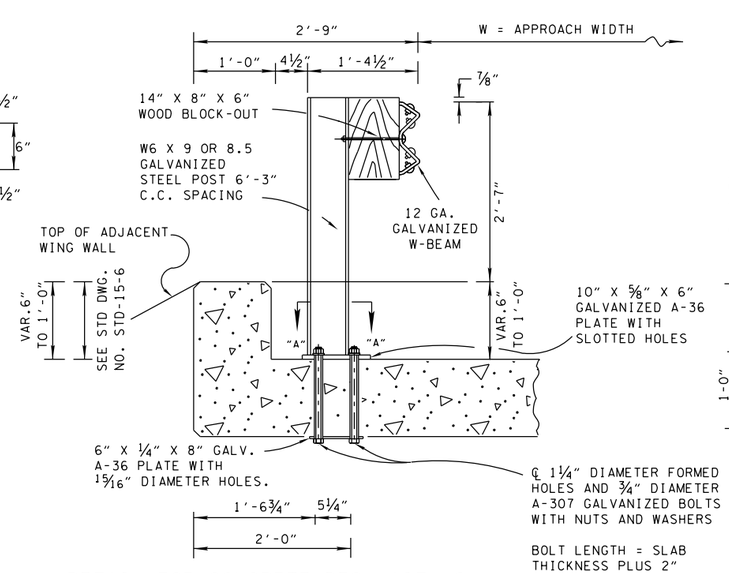

DETAIL FOR CONCRETE DECK WITH 6" TO 1'-0" OF ROADWAY FILL COVER

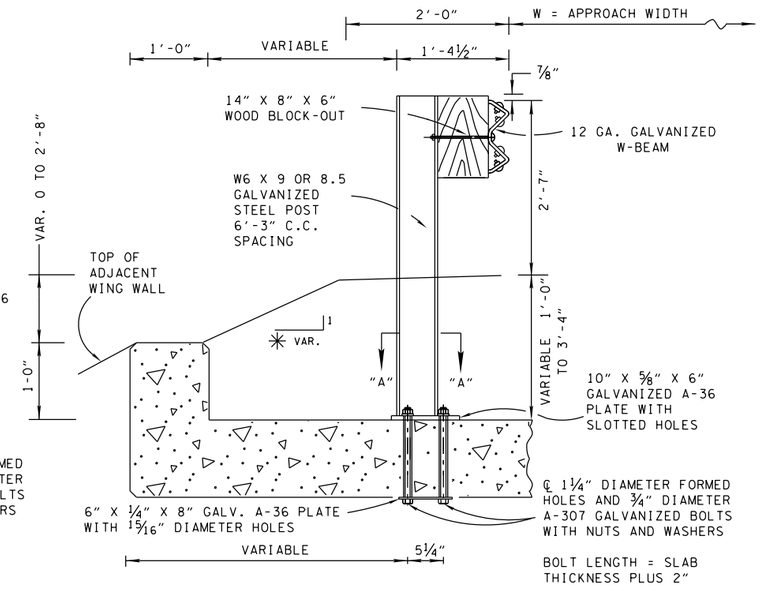

DETAIL FOR CONCRETE DECK WITH 1'-0" TO 3'-4" OF ROADWAY FILL COVER

✳ DENOTES ADJOINING ROADWAY SIDE SLOPE

DESIGN NOTES

1. WHEN DEPTH OF FILL AT FACE OF GUARDRAIL EXCEEDS 3'-4" USE ITEM 705-02.02 AS SHOWN ON S-GR31-1.
2. DO NOT USE ON PRECAST CONCRETE STRUCTURE WITHOUT PRIOR APPROVAL FROM MANUFACTURERS.
3. THIS RAIL SYSTEM HAS BEEN TESTED AND PASSED BY THE CRITERIA SET FORTH BY AASHTO MASH TEST LEVEL 3, AS DOCUMENTED IN ROADSIDE SAFETY RESEARCH PROGRAM POOLED FUND STUDY NO. TPF-5(114) DATED NOV. 11, 2011.
4. ANY REINFORCING STEEL THAT INTERFERES WITH THE 1¼" DIAMETER FORMED HOLES SHALL BE MOVED HORIZONTALLY TO PROVIDE A 1" MINIMUM CLEARANCE TO THE HOLE.

GENERAL NOTES

A. IN ORDER TO EXPEDITE INSTALLATION, GUARDRAIL POST MAY BE FIELD CUT TO ADJUST THE LENGTH REQUIRED. ALL CUT SURFACES MUST RECEIVE GALVANIZE COATING.

B. FOR DIMENSIONS AND DETAILS NOT SHOWN SEE STANDARD DRAWING NOS. STD-15-6, STD-15-7, AND S-GR31-1.

C. TO BE PAID FOR UNDER ITEM NO. 705-01.04 METAL BEAM GUARD FENCE PER LF.

MINOR REVISION -- FHWA APPROVAL NOT REQUIRED.

STATE OF TENNESSEE
DEPARTMENT OF TRANSPORTATION

SPECIAL CASE:
GUARDRAIL ATTACHMENT TO CONCRETE DECKS

7-11-13 | S-GRS-2